NIAGARA STRAIGHT SIDE PRESSES

A-13-H | NON-GEARED DRIVE

12. Clutch Hub
13. Snap Ring
16. Flywheel
17. Inboard Flywheel Bearing
19. Outboard Flywheel Bearing
21. Clutch (See Clutch Parts List)
44. Brake Hub
45. Brake
58. Outer Crankshaft Bushing
59. Dowel
60. Inner Crankshaft Bushing
61. Crankshaft
62. Outer Braring Cap
63. Inner Bearing Cap
64. Bearing Cap Stud
65. Nut
67. Retainer Ring
68. Brake Ring

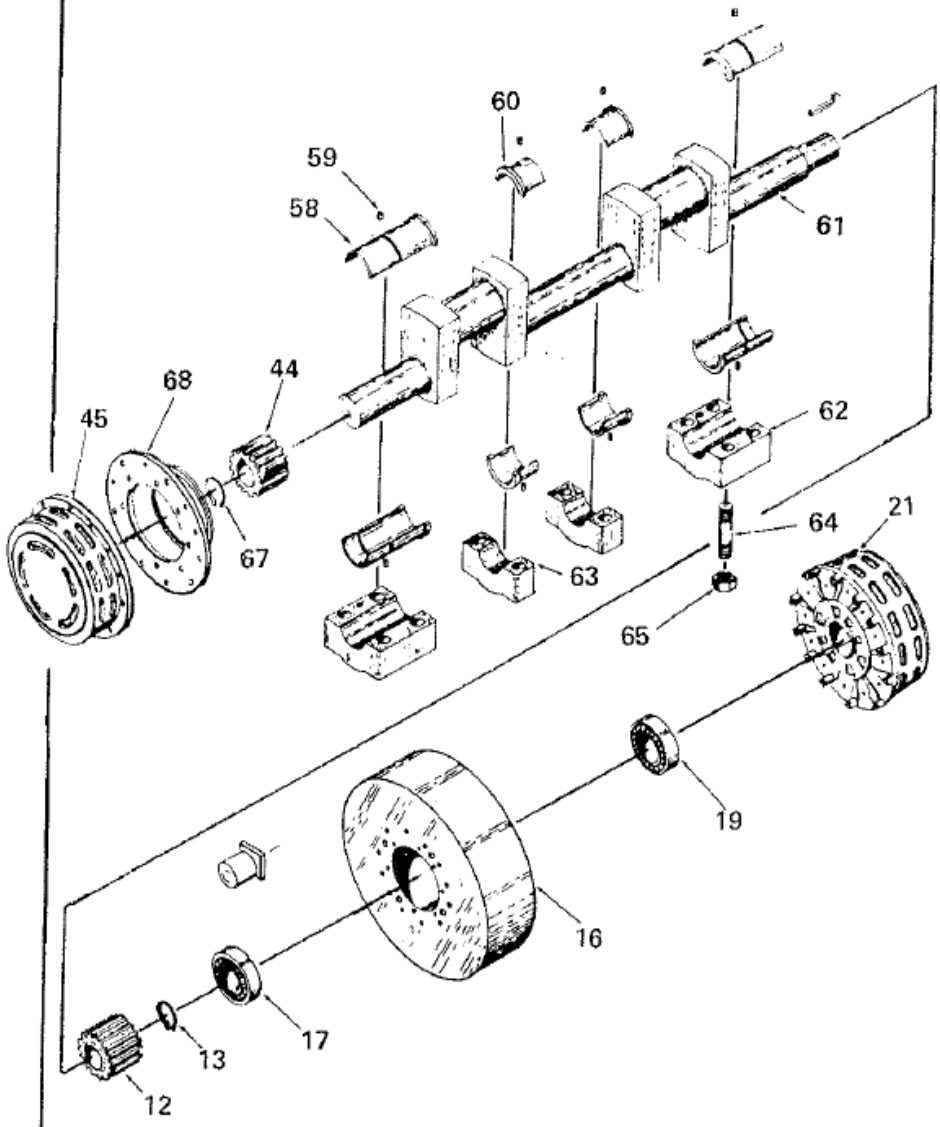

BLISS CLEARING NIAGARA
Member of the Schuler Group